Constant vacuum

Booster pump

Negative pressure for Safety

Chlorinators in accordance with DIN 19606 are characterised by the fact that the chlorine gas to be dosed enters the piping system at a pressure below that of the atmospheric pressure. Any leaks would result in the entry of air in the system, but not in the escape of chlorine gas. Booster pumps are used to produce the vacuum.

Functions

- Suitable for use in accordance with DIN 19606
- Delivery capacity up to 25 m^3/h
- Housing pressure max. 16 bar.
- Oval flange with internal thread
- All parts in contact with the media are corrosion resistant

Guaranteed constant vacuum

The booster pumps have been especially selected for use in chlorinators in accordance with DIN 19606. This standard specifies that the chlorine gas is to be transported under a vacuum and dissolved in water.

The vacuum is generated using injectors. The booster pumps ensure a reliable supply of a sufficient volume of motive water to the injectors at the required pressure.

The booster pump is a multi-level vertical high-pressure centrifugal pump with an “inline” design, i.e. suction and discharge connections are in a line.

Technical data

Booster pump		
Capacity	m^3/h	max. 25
Discharge	bar	max. 16
Rated output	kW	max. 4
Current consumption	A	max. 7.4
Delivery head	m	max. 110
Temperature of the medium	°C	-15 – +120
Max. ambient temperature	°C	40
Voltage supply		3~ 400 V AC, 50 Hz*
Protection class		IP 55
Insulation class		F
Material		cast iron, stainless steel, EPDM
Weight	kg	max. 52

* Version for 60 Hz upon request.

Model variants

Booster pump		MVI 106	MVI 108	MVI 108	MVI 108	MVI 108	MVI 110
Injector		Type A (max. 1 kg/h Cl_2)			Type B (max. 2 kg/h Cl_2)		
Injector back pressure	bar	0.5	1.0	2.0	0.5	1.0	2.0
Rated output	kW	0.75					1.1
Output	m^3/h	0.6	0.8	0.7	1.1		1.3
Delivery head	m	56	70	75	69		82

Booster pump		MVI 108	MVI 110	MVI 410	MVI 410	MVI 410	MVI 410	MVI 410
Injector		Type E (max. 4 kg/h Cl_2)			Type C (max. 10 kg/h Cl_2)		Type C (max. 15 kg/h Cl_2)	
Injector back pressure	bar	0.5	1.0	2.0	1.0	2.0	1.0	2.0
Rated output	kW	0.75	1.1	2.2				
Output	m^3/h	1.4	1.7	2.0	5.2		6.0	6.1
Delivery head	m	65	75	107	82		70	68

Booster pump		Helix V 1605-1	Helix V 1605-1	Helix V 1605-1	Helix V 1605-1
Injector		Type D (max. 25 kg/h Cl_2)		Type D (max. 40 kg/h Cl_2)	
Injector back pressure	bar	1.0	2.0	1.0	2.0
Rated output	kW	4			
Output	m^3/h	13	15		16
Delivery head	m	56	55		52

Characteristic curves

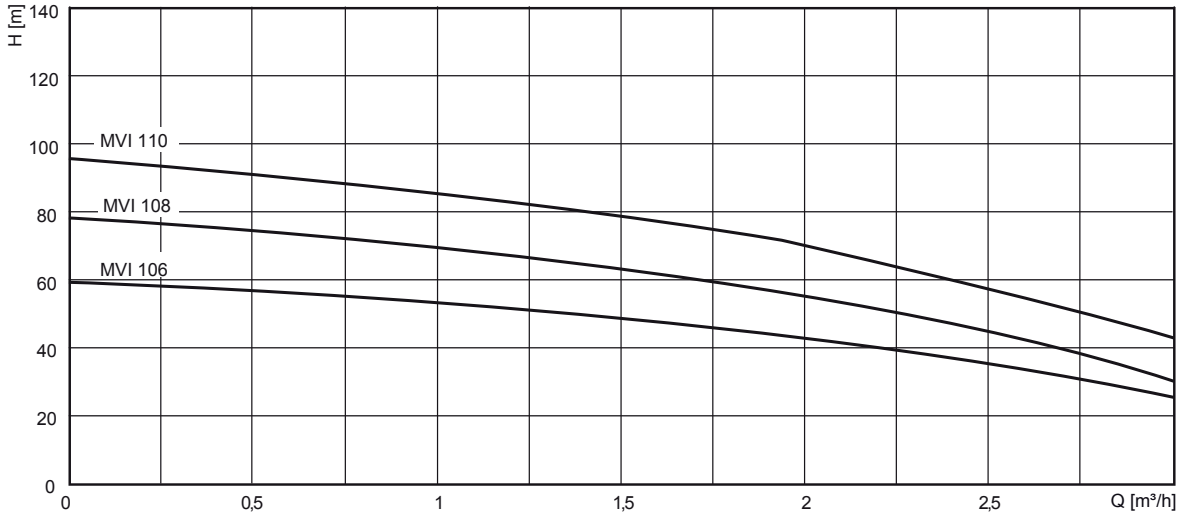

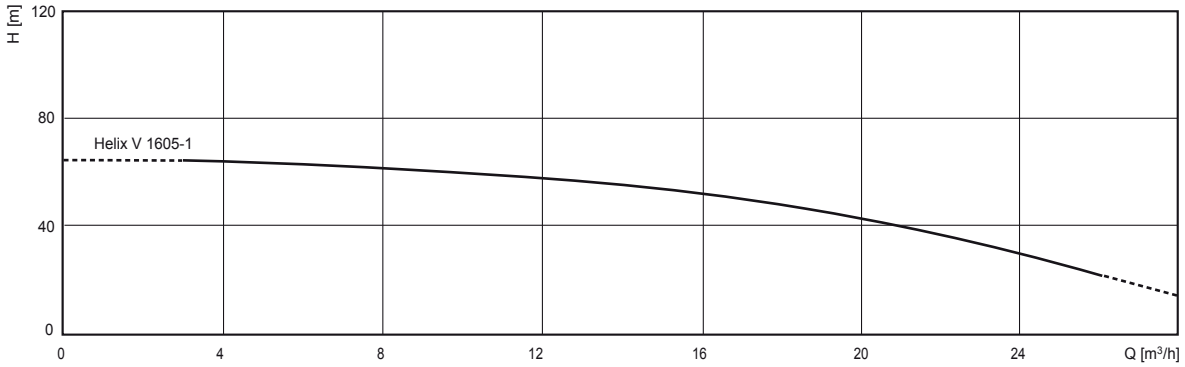

Dimensions

Booster pump type MVI 106 – 110

All dimensions in mm

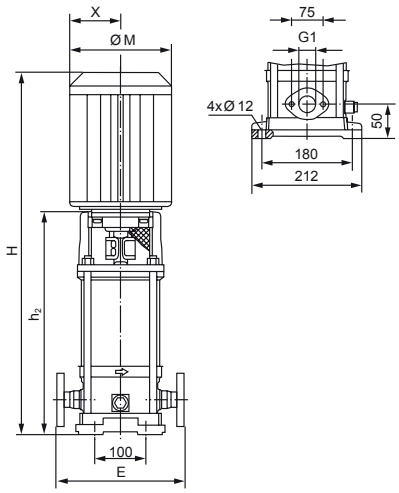

Type	E	H	h_2	Ø M	X
MVI 106	204	598	355	170	127
MVI 108	204	658	415	170	127
MVI 110	204	678	435	170	127

Booster pump type MVI 404 – 410

All dimensions in mm

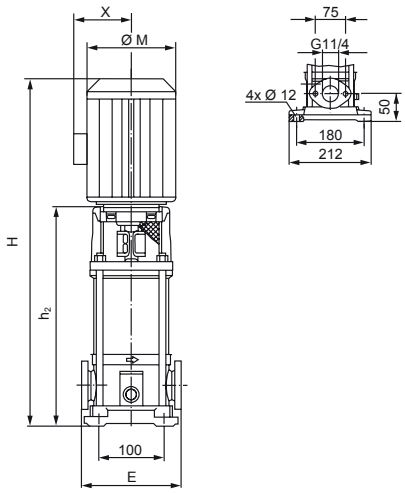

Type	E	H	h_2	Ø M	X
MVI 404	204	574	330.5	170	127
MVI 410	204	751	484.5	193	151

Booster pump type Helix V 1605-1

All dimensions in mm

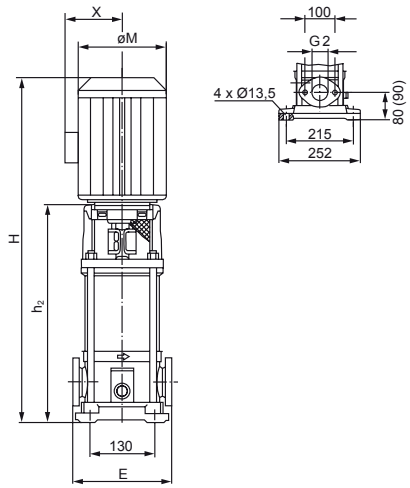

Type	E	H	h_2	Ø M	X
Helix V 1605-1	200	928	622	196	145

Booster pump standard - accessories

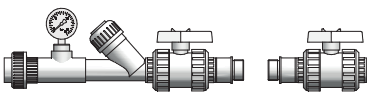

Assembly kits

Not fitted, consisting of:

- 2 shutoff valves
- 1 non-return valve
- 1 pressure gauge (0 – 16 bar)
- PVC adhesive sleeve (G1, G1 1/4 or G2)

or

Not fitted, consisting of:

- 2 shutoff valves
- Reductions (G1, G1 1/4 or G2)

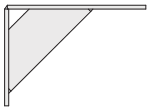

Wall mounting bracket, stainless steel

inc. fastening fixtures

PI-22900-02-V03 | Copyright 06.2017 by Lutz-Jesco GmbH
Subject to technical changes

Lutz-Jesco GmbH
Am Bostelberge 19
30900 Wedemark
Phone: +49 5130 5802-0
Fax: +49 5130 580268
E-mail: info@lutz-jesco.com
Internet: www.lutz-jesco.com